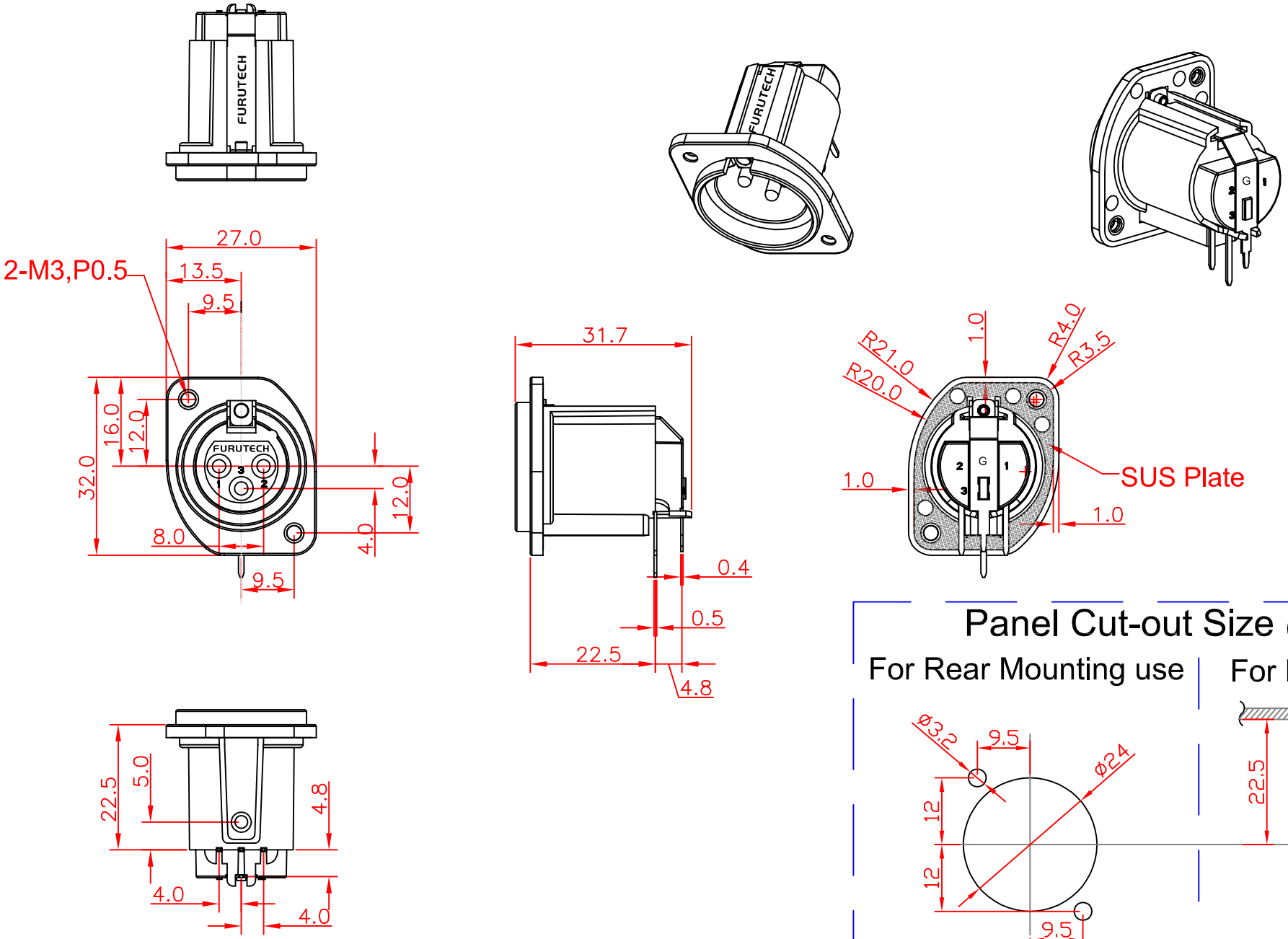

DATE	DRAWING	COMPANY	TITLE	SCALE	DRAWING'S NO.
Mar. 2012	HAYASHI	FURUTECH CO., LTD.	FT-783M Outside Size	1 : 1	FT-783M-01